Monolithic Ceramic Capacitors

MONOLITHIC CERAMIC CAPACITORS

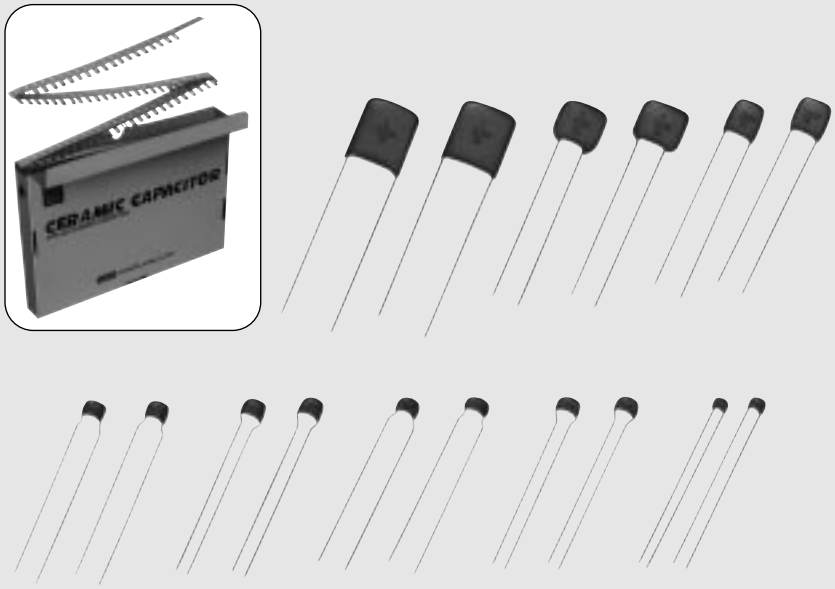

GLOBAL PART NUMBERS
JUNE 2001

Murata
Manufacturing Co., Ltd.

Innovator in Electronics

Cat.No.C49E-14

CONTENTS

● Part Numbering (The structure of the "Global Part Numbers" that have been adopted since June 2001 and the meaning of each code are described herein. If you have any questions about details, inquire at your usual Murata sales office or distributor.)

Monolithic Ceramic Capacitors (lead type)

(Global Part Number) RP E R1 1H 104 K 2 M1 A01 A
❶ ❷ ❸ ❹ ❺ ❻ ❼ ❽ ❾ ❿

❶Product ID

❷Series/Terminal

Product ID	Series/Terminal	
RP	**E**	Monolithic Ceramic Capacitors Lead Type

❸Temperature Characteristics

Code	Temperature Characteristics	Temperature Range	Capacitance Change or Temperature Coefficient	Operating Temperature Range
5C	C0G	-55 to 125°C	0±30ppm/°C	-55 to 125°C
6R	R2H	-55 to 85°C	-220±60ppm/°C	-55 to 125°C
7U	U2J	-55 to 85°C	-750±120ppm/°C	-55 to 125°C
E4	Z5U	10 to 85°C	+22, -56%	10 to 85°C
F5	Y5V	-30 to 85°C	+22, -82%	-30 to 85°C
R7	X7R	-55 to 125°C	±15%	-55 to 125°C

❹Rated Voltage

Code	Rated Voltage
1E	DC25V
1H	DC50V
2A	DC100V
2D	DC200V

❺Capacitance

Expressed by three figures. The unit is pico-farad(pF). The first and second figures are significant digits, and the third figure expresses the number of zeros which follow the two numbers.
If there is a decimal point, it is expressed by the capital letter "**R**". In this case, all figures are significant digits.

❻Capacitance Tolerance

Code	Capacitance Tolerance	Temperature Characteristics	Capacitance Step
C	±0.25pF	C0G,R2H, U2J	≦5pF : 1pF Step
D	±0.5pF		6 to 9pF : 1pF Step
J	±5%		≧10 : E12 Series
K	±10%	X7R	E6 Series
M	±20%	Z5U	E3 Series
Z	+80%, -20%	Y5V	E3 Series

❼Size

Code	Size
1	3.5×3.0 mm
2	5.0×3.5 mm
3	5.0×4.5 mm
4	7.5×5.0 mm
5	7.5×7.5 mm
6	10.0×10.0 mm
7	12.5×12.5 mm

❽Lead Type

Code	Lead Type	Lead Space
A*	Straight Long Bulk	F=2.5mm
B*	Straight Long Bulk	F=5.0mm
C*	Straight Long Bulk	other than above
E*	Straight Taping	F=5.0mm
K*	Incrimp Bulk	F=5.0mm
M*	Incrimp Taping	F=5.0mm
P*	Outcrimp Bulk	F=2.5mm
S*	Outcrimp Taping	F=2.5mm

Lead style depends on individual standards. * indicates a figure.

Continued on the following page. ↗

Continued from the preceding page.

❾Individual Specification Code

Individual Specification Code	Series (size)	Temperature Characteristics Type	Individual Specification	Inner Electrode
A01	**RPE_2** (5.0x3.5mm)	HiK	Standard Type (small internal chip size of 2.0x1.25mm)	Base Metal
B01	**RPE_2** (5.0x3.5mm)	HiK	Standard Type (small internal chip size of 2.0x1.25mm)	Precious Metal
C02	**RPE_1** (3.5x3.0mm)	HiK	Standard Type (Steel lead wire)	Base Metal
C03	**RPE_2** (5.0x3.5mm)	HiK	Standard Type	Base Metal
	RPE_3 (5.0x4.5mm)			
D02	**RPE_1** (3.5x3.0mm)	HiK	Standard Type (Steel lead wire)	Precious Metal
D03	**RPE_1** (3.5x3.0mm)	TC/HiK	Standard Type	Precious Metal
	RPE_2 (5.0x3.5mm)			
	RPE_3 (5.0x4.5mm)			
E12	**RPE_4** (7.5x5.0mm)	HiK	Special Dimension Type (Special size of internal chip)	Base Metal
F03	**RPE_4** (7.5x5.0mm)	TC/HiK	Standard Type (Special size of internal chip)	Precious Metal
	RPE_5 (7.5x7.5mm)			
	RPE_6 (10.0x10.0mm)			
	RPE_7 (12.5x12.5mm)			
F12	**RPE_6** (10.0x10.0mm)	TC	Special Dimension Type (LxW size of 10x8.5 is available.)	Precious Metal
F14	**RPE_6** (10.0x10.0mm)	HiK	Special Dimension Type (LxW size of 10x8.5 is available.)	Precious Metal
X03	**RPE_4** (7.5x5.0mm)	TC	Standard Type (New Ceramic Material), (Special size of internal chip)	Precious Metal
	RPE_5 (7.5x7.5mm)			
	RPE_6 (10.0x10.0mm)			
	RPE_7 (12.5x12.5mm)			
X13	**RPE_6** (10.0x10.0mm)	TC	Special Dimension Type (New Ceramic Material), (LxW size of 10x8.5 is available.)	Precious Metal
Y03	**RPE_1** (3.5x3.0mm)	TC/HiK	Standard Type (New Ceramic Material)	Precious Metal
	RPE_2 (5.0x3.5mm)			
	RPE_3 (5.0x4.5mm)			

❿Packaging

Code	Packaging
A	Ammo Pack
B	Bulk

Monolithic Ceramic Capacitors

muRata

Monolithic Ceramic Capacitors Lead Type

■ Features

1. The RPE series capacitors have small dimensions, large capacitance, and a capacity volume ratio of 10 micro F/cm cube, close to that of electrolytic capacitors. These do not have polarity.
2. These have excellent frequency characteristics and due to these small internal inductance are suitable for high frequencies.
3. These are not coated with wax so there is no change in their exterior appearance due to the outflow of wax during soldering or solvent during cleansing.
4. These are highly inflammable, having characteristics equivalent to the UL-94V-0 standard.

RPE_1 Series

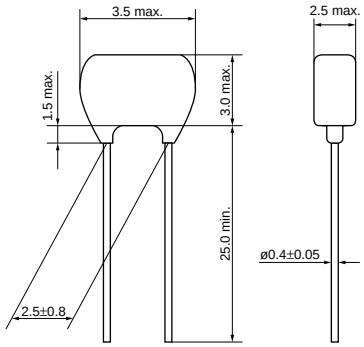

in mm

RPE_2P/2S Series
RPE_3P/3S Series

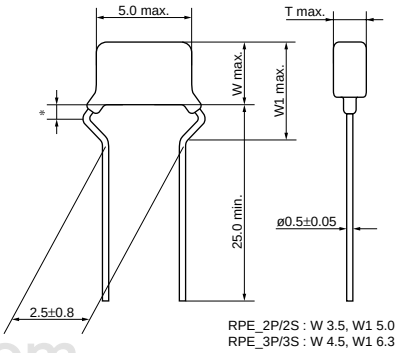

RPE_2P/2S : W 3.5, W1 5.0
RPE_3P/3S : W 4.5, W1 6.3

* Coating extension does not exceed the end of the lead bend.

(in mm)

RPE_2K/2M Series
RPE_3K/3M Series

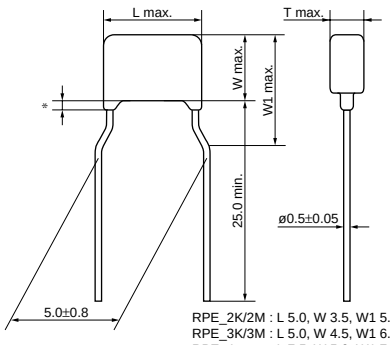

RPE_2K/2M : L 5.0, W 3.5, W1 5.0
RPE_3K/3M : L 5.0, W 4.5, W1 6.3
RPE_4 : L 7.5, W 5.0, W1 7.0

* Coating extension does not exceed the end of the lead bend.

(in mm)

RPE_4 Series

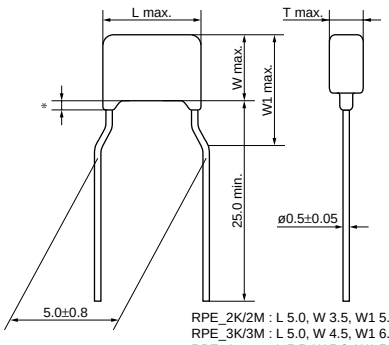

RPE_2K/2M : L 5.0, W 3.5, W1 5.0
RPE_3K/3M : L 5.0, W 4.5, W1 6.3
RPE_4 : L 7.5, W 5.0, W1 7.0

* Coating extension does not exceed the end of the lead bend.

(in mm)

RPE_5 Series

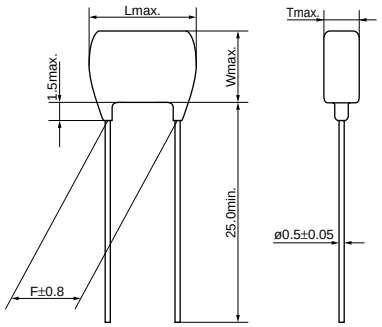

RPE_5 : L 7.5, W 7.5, T 4.0, F 5.0
RPE_6 : L 10.0, W 10.0, T 4.0, F 5.0
RPE_7 : L 12.5, W 12.5, T 5.0, F 10.0

in mm

RPE_6 Series
RPE_7 Series

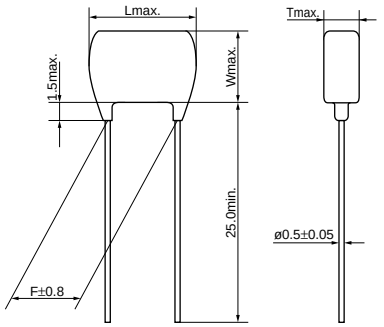

RPE_5 : L 7.5, W 7.5, T 4.0, F 5.0
RPE_6 : L 10.0, W 10.0, T 4.0, F 5.0
RPE_7 : L 12.5, W 12.5, T 5.0, F 10.0

in mm

Continued on the following page.

Continued from the preceding page.

■ Dimensions

Series	Dimensions (mm)					
	L	W	W1	T	F	d
RPE_1	3.5	3.0	-	2.5	2.5	0.4
RPE_2P/S	5.0	3.5	5.0	See rating table	2.5	0.5
RPE_2K/M	5.0	3.5	5.0		5.0	0.5
RPE_3P/S	5.0	4.5	6.3		2.5	0.5
RPE_3K/M	5.0	4.5	6.3		5.0	0.5
RPE_4	7.5	5.0	7.0		5.0	0.5
RPE_5	7.5	7.5	-	4.0	5.0	0.5
RPE_6	10.0	10.0	-	4.0	5.0	0.5
RPE_7	12.5	12.5	-	5.0	10.0	0.5
RPE_T	10.0	8.5	-	4.0	5.0	0.5

■ Marking

Manufacture's Identification *1	Symbol Code (except RPE_1 series)
Nominal Capacitance	Less then 100pF : Actual numbers
	100pF and over : 3 digit numbers
Capacitance Tolerance *1	Symbol marking
DC Rated Voltage *1	Symbol marking (except RPE R7/E4/F5_1 type) Ex. 50V : 5 100V : 1 200V : 6
Temperature Characteristics *1	Symbol marking (except RPE R7/E4/F6_1 type) Ex. 5C : A, R7 : C 6R : R, E4 : E 7U : U, F6 : F

• Marking Example

Type \ Char.	5C	6R/7U	R7	E4	F6
RPE_1 series	* 102J 5A	* 102J 5U	682M		682Z
RPE_2 series	M 102 J5A	——	M 123 K5C	M 333 M5E	M 104 Z5F
RPE_3 series **RPE_4 series**	M 103 J5A	——	M 224 K5C	M 334 M5E	M 105 Z5F
RPE_5 series **RPE_6 series** **RPE_7 series**	M 333 J5A	——	M 105 M5C	M 225 Z5E	M 335 Z5F

*Marked on both sides.
*1 Marking for RPE_2 type ;
Manufacture's identification, capacitance tolerance, rated voltage and temperature characteristics may be omitted by part No.
Please contact Murata for details.

Temperature Compensating Type 50V

Part Number	RPE_1			RPE_2	RPE_4	RPE_5	RPE_6	RPE_7
L x W(mm)	3.5x3.0			5.0x3.5	7.5x5.0	7.5x7.5	10.0x10.0	12.5x12.5
TC Code	C0G (**5C**)	R2H (**6R**)	U2J (**7U**)	C0G (**5C**)	C0G (**5C**)	C0G (**5C**)	C0G (**5C**)	C0G (**5C**)
Rated Volt.(Vdc)	50 (**1H**)	50 (**1H**)	50 (**1H**)	50 (**1H**)	50 (**1H**)	50 (**1H**)	50 (**1H**)	50 (**1H**)
Capacitance and T(mm)								
0.5pF	2.5							
1.0pF	2.5			2.5				
2.0pF	2.5			2.5				
3.0pF	2.5	2.5	2.5	2.5				
4.0pF	2.5	2.5	2.5	2.5				
5.0pF	2.5	2.5	2.5	2.5				
6.0pF	2.5	2.5	2.5	2.5				
7.0pF	2.5	2.5	2.5	2.5				
8.0pF	2.5	2.5	2.5	2.5				
9.0pF	2.5	2.5	2.5	2.5				
10.0pF	2.5	2.5	2.5	2.5				
12pF	2.5	2.5	2.5	2.5				
15pF	2.5	2.5	2.5	2.5				
18pF	2.5	2.5	2.5	2.5				
22pF	2.5	2.5	2.5	2.5				
27pF	2.5	2.5	2.5	2.5				
33pF	2.5	2.5	2.5	2.5				
39pF	2.5	2.5	2.5	2.5				
47pF	2.5	2.5	2.5	2.5				
56pF	2.5	2.5	2.5	2.5				
68pF	2.5	2.5	2.5	2.5				
82pF	2.5	2.5	2.5	2.5				
100pF	2.5	2.5	2.5	2.5				
120pF	2.5	2.5	2.5	2.5				
150pF	2.5	2.5	2.5	2.5				
180pF	2.5	2.5	2.5	2.5				
220pF	2.5	2.5	2.5	2.5				
270pF	2.5	2.5	2.5	2.5				
330pF	2.5	2.5	2.5	2.5				
390pF	2.5	2.5	2.5	2.5				
470pF	2.5	2.5	2.5	2.5				
560pF	2.5	2.5	2.5	2.5				
680pF	2.5		2.5	2.5				
820pF	2.5		2.5	2.5				
1000pF	2.5		2.5	2.5				
1200pF	2.5		2.5	3.2				
1500pF	2.5		2.5	3.2				
1800pF	2.5		2.5	3.2				
2200pF	2.5			3.2				
2700pF				3.2				
3300pF				3.2				
3900pF				3.2				
4700pF				3.2				
5600pF				3.2				
6800pF					3.2			
8200pF					3.2			
10000pF					3.2			
12000pF					3.2			
15000pF					3.2			

Continued on the following page.

Continued from the preceding page.

Part Number	RPE_1			RPE_2	RPE_4	RPE_5	RPE_6	RPE_7
L x W(mm)	3.5x3.0			5.0x3.5	7.5x5.0	7.5x7.5	10.0x10.0	12.5x12.5
TC Code	C0G (**5C**)	R2H (**6R**)	U2J (**7U**)	C0G (**5C**)	C0G (**5C**)	C0G (**5C**)	C0G (**5C**)	C0G (**5C**)
Rated Volt.(Vdc)	50 (**1H**)	50 (**1H**)	50 (**1H**)	50 (**1H**)	50 (**1H**)	50 (**1H**)	50 (**1H**)	50 (**1H**)
Capacitance and T(mm)								
18000pF						4.0		
22000pF							4.0	
27000pF							4.0	
33000pF							4.0	
39000pF							4.0	
47000pF								5.0
56000pF								5.0
68000pF								5.0

Temperature Compensating Type 100V

Part Number	RPE_1			RPE_2	RPE_3	RPE_4	RPE_5	RPE_6	RPE_7
L x W(mm)	3.5x3.0			5.0x3.5	5.0x4.5	7.5x5.0	7.5x7.5	10.0x10.0	12.5x12.5
TC Code	C0G (**5C**)	R2H (**6R**)	U2J (**7U**)	C0G (**5C**)	C0G (**5C**)	C0G (**5C**)	C0G (**5C**)	C0G (**5C**)	C0G (**5C**)
Rated Volt.(Vdc)	100 (**2A**)	100 (**2A**)	100 (**2A**)	100 (**2A**)	100 (**2A**)	100 (**2A**)	100 (**2A**)	100 (**2A**)	100 (**2A**)
Capacitance and T(mm)									
1.0pF	2.5			2.5					
2.0pF	2.5			2.5					
3.0pF	2.5	2.5	2.5	2.5					
4.0pF	2.5	2.5	2.5	2.5					
5.0pF	2.5	2.5	2.5	2.5					
6.0pF	2.5	2.5	2.5	2.5					
7.0pF	2.5	2.5	2.5	2.5					
8.0pF	2.5	2.5	2.5	2.5					
9.0pF	2.5	2.5	2.5	2.5					
10.0pF	2.5	2.5	2.5	2.5					
12pF	2.5	2.5	2.5	2.5					
15pF	2.5	2.5	2.5	2.5					
18pF	2.5	2.5	2.5	2.5					
22pF	2.5	2.5	2.5	2.5					
27pF	2.5	2.5	2.5	2.5					
33pF	2.5	2.5	2.5	2.5					
39pF	2.5	2.5	2.5	2.5					
47pF	2.5	2.5	2.5	2.5					
56pF	2.5	2.5	2.5	2.5					
68pF	2.5	2.5	2.5	2.5					
82pF	2.5	2.5	2.5	2.5					
100pF	2.5	2.5	2.5	2.5					
120pF	2.5	2.5	2.5	2.5					
150pF	2.5	2.5	2.5	2.5					
180pF	2.5	2.5	2.5	2.5					
220pF	2.5	2.5	2.5	2.5					
270pF	2.5	2.5	2.5	2.5					
330pF	2.5	2.5	2.5	2.5					
390pF	2.5	2.5	2.5	2.5					
470pF	2.5	2.5	2.5	2.5					
560pF	2.5	2.5	2.5	2.5					
680pF	2.5		2.5	2.5					
820pF	2.5		2.5	3.2					

Continued on the following page.

Continued from the preceding page.

Part Number	RPE_1			RPE_2	RPE_3	RPE_4	RPE_5	RPE_6	RPE_7
L x W(mm)	3.5x3.0			5.0x3.5	5.0x4.5	7.5x5.0	7.5x7.5	10.0x10.0	12.5x12.5
TC Code	C0G (**5C**)	R2H (**6R**)	U2J (**7U**)	C0G (**5C**)	C0G (**5C**)	C0G (**5C**)	C0G (**5C**)	C0G (**5C**)	C0G (**5C**)
Rated Volt.(Vdc)	100 (**2A**)	100 (**2A**)	100 (**2A**)	100 (**2A**)	100 (**2A**)	100 (**2A**)	100 (**2A**)	100 (**2A**)	100 (**2A**)
Capacitance and T(mm)									
1000pF	2.5			3.2					
1200pF				3.2					
1500pF				3.2					
1800pF				3.2					
2200pF				3.2					
2700pF					3.2				
3300pF					3.2				
3900pF					3.2				
4700pF						2.5			
5600pF						3.2			
6800pF						3.2			
8200pF							4.0		
10000pF							4.0		
12000pF							4.0		
15000pF								4.0	
18000pF								4.0	
22000pF								4.0	
27000pF								4.0	
33000pF								4.0	
39000pF									5.0
47000pF									5.0
56000pF									5.0

Temperature Compensating Type 200V

Part Number	RPE_1		RPE_2	RPE_3	RPE_4	RPE_5	RPE_6	RPE_7
L x W(mm)	3.5x3.0		5.0x3.5	5.0x4.5	7.5x5.0	7.5x7.5	10.0x10.0	12.5x12.5
TC Code	C0G (**5C**)	R2H (**6R**)	C0G (**5C**)	C0G (**5C**)	C0G (**5C**)	C0G (**5C**)	C0G (**5C**)	C0G (**5C**)
Rated Volt.(Vdc)	200 (**2D**)	200 (**2D**)	200 (**2D**)	200 (**2D**)	200 (**2D**)	200 (**2D**)	200 (**2D**)	200 (**2D**)
Capacitance and T(mm)								
1.0pF	2.5		2.5					
2.0pF	2.5		2.5					
3.0pF	2.5	2.5	2.5					
4.0pF	2.5	2.5	2.5					
5.0pF	2.5	2.5	2.5					
6.0pF	2.5	2.5	2.5					
7.0pF	2.5	2.5	2.5					
8.0pF	2.5	2.5	2.5					
9.0pF	2.5	2.5	2.5					
10.0pF	2.5	2.5	2.5					
12pF	2.5	2.5	2.5					
15pF	2.5	2.5	2.5					
18pF	2.5	2.5	2.5					
22pF	2.5	2.5	2.5					
27pF	2.5	2.5	2.5					
33pF	2.5	2.5	2.5					
39pF	2.5	2.5	2.5					
47pF	2.5	2.5	2.5					
56pF	2.5	2.5	2.5					

Continued on the following page.

Continued from the preceding page.

Part Number	RPE_1		RPE_2	RPE_3	RPE_4	RPE_5	RPE_6	RPE_7
L x W(mm)	3.5x3.0		5.0x3.5	5.0x4.5	7.5x5.0	7.5x7.5	10.0x10.0	12.5x12.5
TC Code	C0G (**5C**)	R2H (**6R**)	C0G (**5C**)	C0G (**5C**)	C0G (**5C**)	C0G (**5C**)	C0G (**5C**)	C0G (**5C**)
Rated Volt.(Vdc)	200 (**2D**)	200 (**2D**)	200 (**2D**)	200 (**2D**)	200 (**2D**)	200 (**2D**)	200 (**2D**)	200 (**2D**)
Capacitance and T(mm)								
68pF	2.5	2.5	2.5					
82pF	2.5	2.5	2.5					
100pF	2.5	2.5	2.5					
120pF	2.5		2.5					
150pF			2.5					
180pF			3.2					
220pF			3.2					
270pF			3.2					
330pF			3.2					
390pF			3.2					
470pF				3.2				
560pF				3.2				
680pF				3.2				
820pF				3.2				
1000pF				3.2				
1200pF					3.2			
1500pF					3.2			
1800pF						4.0		
2200pF						4.0		
2700pF						4.0		
3300pF						4.0		
3900pF						4.0		
4700pF							4.0	
5600pF							4.0	
6800pF							4.0	
8200pF							4.0	
10000pF							4.0	
12000pF								5.0
15000pF								5.0
18000pF								5.0
22000pF								5.0
27000pF								5.0

High Dielectric Constant Type 25V Y5V Characteristics

Part Number	RPE_3
L x W(mm)	5.0x4.5
TC Code	Y5V (**F5**)
Rated Volt.(Vdc)	25 (**1E**)
Capacitance and T(mm)	
1.0µF	2.5

RPE_3K/3M series only.

High Dielectric Constant Type 25V Z5U Characteristics

Part Number	RPE_3
L x W(mm)	5.0x4.5
TC Code	Z5U (**E4**)
Rated Volt.(Vdc)	25 (**1E**)
Capacitance and T(mm)	
1.0µF	2.5

RPE_3K/3M series only.

High Dielectric Constant Type 50V X7R Characteristics

Part Number	RPE_1	RPE_2	RPE_3	RPE_6	RPE_7
L x W(mm)	3.5x3.0	5.0x3.5	5.0x4.5	10.0x10.0	12.5x12.5
TC Code	X7R (**R7**)	X7R (**R7**)	X7R (**R7**)	X7R (**R7**)	X7R (**R7**)
Rated Volt.(Vdc)	50 (**1H**)	50 (**1H**)	50 (**1H**)	50 (**1H**)	50 (**1H**)
Capacitance and T(mm)					
220pF	2.5	2.5			
330pF	2.5	2.5			
470pF	2.5	2.5			
680pF	2.5	2.5			
1000pF	2.5	2.5			
1500pF	2.5	2.5			
2200pF	2.5	2.5			
3300pF	2.5	2.5			
4700pF	2.5	2.5			
6800pF	2.5	2.5			
10000pF	2.5	2.5			
15000pF	2.5	2.5			
22000pF	2.5	2.5			
33000pF	2.5	3.2			
47000pF	2.5	3.2			
68000pF	2.5	3.2			
0.10µF	2.5	3.2			
0.15µF		3.2			
0.22µF		3.2			
0.33µF		2.5			
0.47µF		3.2			
0.68µF			3.2		
1.0µF			3.2		
1.5µF				4.0	
2.2µF				4.0	
3.3µF					5.0

High Dielectric Constant Type 50V Y5V Characteristics

Part Number	RPE_1	RPE_2	RPE_4	RPE_6
L x W(mm)	3.5x3.0	5.0x3.5	7.5x5.0	10.0x10.0
TC Code	Y5V (**F5**)	Y5V (**F5**)	Y5V (**F5**)	Y5V (**F5**)
Rated Volt.(Vdc)	50 (**1H**)	50 (**1H**)	50 (**1H**)	50 (**1H**)
Capacitance and T(mm)				
1000pF	2.5	2.5		
2200pF	2.5	2.5		
4700pF	2.5	2.5		
10000pF	2.5	2.5		
22000pF	2.5	2.5		
47000pF	2.5	2.5		
0.1µF	2.5	2.5		
0.22µF	2.5	3.2		
0.47µF		3.2		
1.0µF			2.5	
2.2µF				4.0
4.7µF				4.0

High Dielectric Constant Type 50V Z5U Characteristics

Part Number	RPE_1	RPE_2	RPE_3	RPE_4	RPE_6	RPE_7
L x W(mm)	3.5x3.0	5.0x3.5	5.0x4.5	7.5x5.0	10.0x10.0	12.5x12.5
TC Code	Z5U (**E4**)	Z5U (**E4**)	Z5U (**E4**)	Z5U (**E4**)	Z5U (**E4**)	Z5U (**E4**)
Rated Volt.(Vdc)	50 (**1H**)	50 (**1H**)	50 (**1H**)	50 (**1H**)	50 (**1H**)	50 (**1H**)
Capacitance and T(mm)						
1000pF	2.5	2.5				
2200pF	2.5	2.5				
4700pF	2.5	2.5				
10000pF	2.5	2.5				
22000pF	2.5	2.5				
47000pF	2.5	2.5				
0.10µF	2.5	2.5				
0.22µF			2.5			
0.47µF			3.2			
1.0µF				3.2		
2.2µF					4.0	
4.7µF						5.0

High Dielectric Constant Type 100V X7R Characteristics

Part Number	RPE_1	RPE_2	RPE_3	RPE_4	RPE_5	RPE_6	RPE_7
L x W(mm)	3.5x3.0	5.0x3.5	5.0x4.5	7.5x5.0	7.5x7.5	10.0x10.0	12.5x12.5
TC Code	X7R (**R7**)	X7R (**R7**)	X7R (**R7**)	X7R (**R7**)	X7R (**R7**)	X7R (**R7**)	X7R (**R7**)
Rated Volt.(Vdc)	100 (**2A**)	100 (**2A**)	100 (**2A**)	100 (**2A**)	100 (**2A**)	100 (**2A**)	100 (**2A**)
Capacitance and T(mm)							
220pF	2.5	2.5					
330pF	2.5	2.5					
470pF	2.5	2.5					
680pF	2.5	2.5					
1000pF	2.5	2.5					
1500pF	2.5	2.5					
2200pF	2.5	2.5					
3300pF	2.5	2.5					
4700pF	2.5	2.5					
6800pF	2.5	2.5					
10000pF	2.5	2.5					
15000pF		2.5					
22000pF		3.2					
33000pF		3.2					
47000pF			3.2				
68000pF			3.2				
0.10µF			3.2				
0.15µF				3.2			
0.22µF					4.0		
0.33µF					4.0		
0.47µF					4.0		
0.68µF						4.0	
1.0µF						4.0	
1.5µF							5.0
2.2µF							5.0

High Dielectric Constant Type 100V Y5V Characteristics

Part Number	RPE_1	RPE_2	RPE_3	RPE_4	RPE_5	RPE_6	RPE_7
L x W(mm)	3.5x3.0	5.0x3.5	5.0x4.5	7.5x5.0	7.5x7.5	10.0x10.0	12.5x12.5
TC Code	Y5V (**F5**)	Y5V (**F5**)	Y5V (**F5**)	Y5V (**F5**)	Y5V (**F5**)	Y5V (**F5**)	Y5V (**F5**)
Rated Volt.(Vdc)	100 (**2A**)	100 (**2A**)	100 (**2A**)	100 (**2A**)	100 (**2A**)	100 (**2A**)	100 (**2A**)
Capacitance and T(mm)							
1000pF	2.5	2.5					
2200pF	2.5	2.5					
4700pF	2.5	2.5					
10000pF	2.5	2.5					
22000pF		2.5					
47000pF			2.5				
0.10µF				2.5			
0.22µF					4.0		
0.47µF					4.0		
1.0µF						4.0	
2.2µF							5.0

High Dielectric Constant Type 100V Z5U Characteristics

Part Number	RPE_1	RPE_2	RPE_3	RPE_5	RPE_6	RPE_7
L x W(mm)	3.5x3.0	5.0x3.5	5.0x4.5	7.5x7.5	10.0x10.0	12.5x12.5
TC Code	Z5U (**E4**)	Z5U (**E4**)	Z5U (**E4**)	Z5U (**E4**)	Z5U (**E4**)	Z5U (**E4**)
Rated Volt.(Vdc)	100 (**2A**)	100 (**2A**)	100 (**2A**)	100 (**2A**)	100 (**2A**)	100 (**2A**)
Capacitance and T(mm)						
1000pF	2.5	2.5				
2200pF	2.5	2.5				
4700pF	2.5	2.5				
10000pF	2.5	2.5				
22000pF		2.5				
47000pF			2.5			
0.10µF			3.2			
0.22µF				4.0		
0.47µF				4.0		
1.0µF					4.0	
2.2µF						5.0

High Dielectric Constant Type 200V X7R Characteristics

Part Number	RPE_1	RPE_2	RPE_3	RPE_4	RPE_5	RPE_6	RPE_7
L x W(mm)	3.5x3.0	5.0x3.5	5.0x4.5	7.5x5.0	7.5x7.5	10.0x10.0	12.5x12.5
TC Code	X7R (**R7**)	X7R (**R7**)	X7R (**R7**)	X7R (**R7**)	X7R (**R7**)	X7R (**R7**)	X7R (**R7**)
Rated Volt.(Vdc)	200 (**2D**)	200 (**2D**)	200 (**2D**)	200 (**2D**)	200 (**2D**)	200 (**2D**)	200 (**2D**)
Capacitance and T(mm)							
220pF	2.5	2.5					
330pF	2.5	2.5					
470pF	2.5	2.5					
680pF	2.5	2.5					
1000pF	2.5	2.5					
1500pF	2.5	2.5					
2200pF	2.5	2.5					
3300pF	2.5	3.2					
4700pF	2.5	3.2					
6800pF		3.2					
10000pF		3.2					
15000pF			3.2				
22000pF			3.2				
33000pF			3.2				
47000pF			3.2				
68000pF				3.2			
0.10µF					4.0		
0.15µF					4.0		
0.22µF						4.0	
0.33µF						4.0	
0.47µF						4.0	
0.68µF							5.0
1.0µF							5.0
1.5µF							5.0

High Dielectric Constant Type 200V Z5U Characteristics

Part Number	**RPE_1**	**RPE_2**	**RPE_3**	**RPE_5**	**RPE_6**	**RPE_7**
L x W(mm)	3.5x3.0	5.0x3.5	5.0x4.5	7.5x7.5	10.0x10.0	12.5x12.5
TC Code	Z5U (**E4**)	Z5U (**E4**)	Z5U (**E4**)	Z5U (**E4**)	Z5U (**E4**)	Z5U (**E4**)
Rated Volt.(Vdc)	200 (**2D**)	200 (**2D**)	200 (**2D**)	200 (**2D**)	200 (**2D**)	200 (**2D**)
Capacitance and T(mm)						
1000pF	2.5	3.2				
2200pF	2.5	3.2				
4700pF		3.2				
10000pF			2.5			
22000pF			3.2			
47000pF			3.2			
0.10µF				4.0		
0.22µF					4.0	
0.47µF						5.0

Specifications and Test Methods

No.	Item		Specification: Temperature Compensating Type	Specification: High Dielectric Constant Type	Test Method
1	Operating Temperature Range		−55 to +125˚C	X7R : −55 to +125˚C Z5U : +10 to + 85˚C Y5V : −30 to + 85˚C	
2	Rated Voltage		See previous pages.		The rated voltage is defined the maximum voltage which may be applied continously to the capacitor. When AC voltage is superimposed on DC voltage, V^{P-P} or V^{O-P}, whichever is larger, shall be maintained within the rated voltage range.
3	Appearance		No defects or abnormalities.		Visual inspection.
4	Dimension and Marking		See Dimensions		Visual inspection. Vernier Caliper.
5	Dielectric Strength	Between Terminals	No defects or abnormalities.		The capacitors shall not be damaged when DC voltages of 300 % of the rated voltage are applied between the terminals for 1 to 5 seconds. (Charge/discharge current ≦ 50mA)
		Body Insulation	No defects or abnormalities.		The capacitor is placed in a container with metal balls of diameter 1mm so that each terminal, short-circuited, is kept approximately 2mm from the balls as shown in the figure, and 250 % of the rated DC voltage is impressed for one to five seconds between capacitor terminals and metal balls. (Charge/discharge current ≦ 50mA) 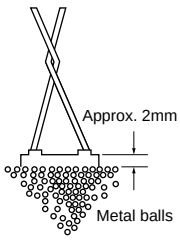
6	Insulation Resistance	Between Terminals	100,000MΩ min. or 1000Ω • F min. (whichever is smaller)	X7R : 100,000MΩ min. or 1000Ω • F min. (whichever is smaller) Z5U, Y5V : 10,000MΩ min. or 500Ω • F min. (whichever is smaller)	The insulation resistance shall be measured with a DC voltage not exceeding the rated voltage at normal temperature and humidity and within 2 minutes of charging. (Charge/Discharge current ≦ 50mA)
7	Capacitance		Within the specified tolerance.		The capacitance, Q/DF shall be measured at 25˚C at the frequency and voltage shown in the table.
8	Q/Dissipation Factor (D.F.)		30pF min. : Q ≧ 1000 30pF max. : Q ≧ 400+20C C : Nominal capacitance (pF)	X7R, Z5U : 0.025 max. Y5V : 0.05 max.	
9	Capacitance Temperature Characteristics	Capacitance Change	Within the specified tolerance. (Table A)	Within the specified tolerance. (Table B)	The capacitance change shall be measured after 5min. at each specified temperature stage. (1) Temperature Compensating Type The temperature coefficient is determined using the capacitance measured in step 3 as a reference. When cycling the temperature sequentially from step 1 through 5 (−55 to +125˚C for C0G ; −55 to +85˚C for other temp. coeffs.) the capacitance shall be within the specified tolerance for the temperature coefficient and capacitance change as Table A. The capacitance drift is caluculated by dividing the differences between the maximum and minimum measured values in step 1, 3 and 5 by the cap. value in step 3.
		Temperature Coefficient	Within the specified tolerance. (Table A)		
		Capacitance Drift	Within ±0.2% or ±0.05pF (Whichever is larger)		(2) High Dielectric Constant Type The ranges of capacitance change compared with the 25˚C value over the temperature ranges shown in the Table B shall be within the specified ranges.

Item \ Char.	C0G, R2H, U2J (1000pF and Below)	C0G, R2H, U2J (more than 1000pF) X7R, Y5V)	Z5U
Frequency	1±0.1MHz	1±0.1kHz	1±0.1kHz
Voltage	0.5 to 5Vrms	1±0.2Vrms	0.5±0.0.5Vrms

Step	Temperature (˚C)
1	25±2
2	−55±3
3	25±2
4	125±3 (for C0G) 85±3 (for other TC)
5	25±2

Continued on the following page.

Specifications and Test Methods

Continued from the preceding page.

No.	Item		Specification: Temperature Compensating Type	Specification: High Dielectric Constant Type	Test Method
10	Terminal Strength	Tensile Strength	Termination not to be broken or loosened.		As in the figure, fix the capacitor body, apply the force gradually to each lead in the radial direction of the capacitor until reaching 10N* and then keep applied the force for 10±1 seconds. 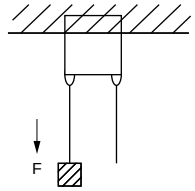 * 5N for L3.5×W3.0 (mm)
		Bending Strength	Termination not to be broken or loosened.		Each lead wire shall be subjected to a force of 2.5N and then be bent 90° at the point of egress in one direction. Each wire is then returened to the original position and bent 90° in the opposite direction at the rate of one bend per 2-3 seconds.
11	Vibration Resistance	Appearance	No defects or abnormalities.		The capacitor is soldered securely to a supporting terminal and a 10 to 55Hz vibration of 1.5mm peak-peak amplitude is applied for six hours total, 2 hours in each mutually perpendicular direction. Allow 1 minute to cycle the frequency from 10Hz to 55Hz and the converse.
		Capacitance	Within the specified tolerance.		
		Q/D.F.	30pF min. : Q ≧ 1000 30pF max. : Q ≧ 400+20C C : Nominal capacitance (pF)	X7R, Z5U : 0.025 max. Y5V : 0.05 max.	
12	Solderability of Leads		Solder is deposited on unintermittently immersed portion in axial direction covering 3/4 or more in circumferential direction of lead wires.		The terminal of a capacitor is dipped into a 25 % ethanol (JIS-K-8101) solution of rosin (JIS-K-5902) and then into molten solder (JIS-H-4341, H63A) of 235±5°C for 2 seconds ±0.5 seconds. In both cases the depth of dipping is up to about 1.5mm to 2mm from the terminal body.
13	Resistance to Soldering Heat	Appearance	No defects or abnormalities.		The lead wire is immersed in the melted solder (JIS-H-4341, H63A) 1.5mm to 2mm from the main body at 270±5°C for 3±0.5 seconds (L3.5×W3.0 (mm) type) or 350±10°C for 3.5 seconds ±0.5 seconds (all other types). The specified items are measured after 24 hours ±2 hours (temperature compensating type) or 48 hours ±4 hours (high dielectric type). • Initial measurement for high dielectric constant type. The capacitors are heat treated for one hour at 150^{+0}_{-10} °C, allowed to set at room temperature for 48 hours ±4 hours, and given an initial measurement.
		Capacitance Change	Within ±2.5% or ±0.25pF (Whichever is larger)	X7R : Within ±7.5% Z5U, Y5V : Within ±20%	
		Dielectric Strength (Between Terminals)	No defects.		
14	Temperature and Immersion Cycle	Appearance	No defects or abnormalities.		First, repeat the following temperature/time cycle five times : lowest operating temperature ±3°C/30±3 minutes ≫ ordinary temperature/3 minutes max. ≫ highest operating temperature ±3°C/30±3 minutes ≫ ordinary temperature/3 minutes max. Next, repeat twice the sucessive cycles of immersion, each cycle consisting of immersion in a fresh water at 65^{+5}_{-0}°C for 15 minutes and immersion in a saturated aqueous solution of salt at 0±3°C for 15 minutes. The capacitor is then promptly washed in running water, dried with a drying cloth, and allowed to sit at room temperature for 24 hours ±2 hours (temperature compensating type) or 48 hours ±4 hours (high dielectric type). • Initial measurement for high dielectric constant type. The capacitors are heat treated for one hour at 150^{+0}_{-10} °C, allowed to sit at room temperature for 48 hours ±4 hours, and given an initial measurement.
		Capacitance Change	Within ±5% or ±0.5pF (Whichever is larger)	X7R : Within ±12.5% Z5U, Y5V : Within ±30%	
		Q/D.F.	30pF min. : Q ≧ 350 10pF to 30pF : Q ≧ 275+ $\frac{5}{2}$ C 10pF max. : Q ≧ 200+10C C : Nominal capacitance (pF)	X7R : 0.05 max. Z5U, Y5V : 0.075 max.	
		Insulation Resistance	10000MΩ or 500Ω • F min. (Whichever is smaller)	X7R : 10000MΩ or 500Ω • F min. (Whichever is smaller) Z5U, Y5V : 1000MΩ or 50Ω • F min. (Whichever is smaller)	
		Dielectric Strength (Between Terminals)	No defects or abnormalities.		

Continued on the following page.

Specifications and Test Methods

Continued from the preceding page.

No.	Item		Specification: Temperature Compensating Type	Specification: High Dielectric Constant Type	Test Method
15	Humidity (Steady State)	Appearance	No defects or abnormalities.		Set the capacitor for 500 hours $^{+24}_{0}$ hours at 40±2˚C in 90 to 95% humidity. Remove and set for 24 hours ±2 hours (temperature compensating type) and 48 hours ±4 hours (high dielectric constant type) at room temperature, then measure. • Initial measurement for high dielectric constant type The capacitors are heat treated for one hour at 150$^{+0}_{-10}$ ˚C, allowed to sit at room temperature for 48 hours ±4 hours and given an initial measurement.
		Capacitance Change	Within ±5% or ±0.5pF (Whichever is larger)	X7R : Within ±12.5% Z5U, Y5V : Within ±30%	
		Q/D.F.	30pF min. : Q ≧ 350 10pF to 30pF : Q ≧ 275+ $\frac{5}{2}$ C 10pF max. : Q ≧ 200+10C C : Nominal capacitance (pF)	X7R : 0.05 max. Z5U, Y5V : 0.075 max.	
		Insulation Resistance	10000MΩ or 500Ω • F min. (Whichever is smaller)	X7R : 10000MΩ or 500Ω • F min. (whichever is smaller) Z5U, Y5V : 1000MΩ or 50Ω • F min. (whichever is smaller)	
16	Humidity Load	Appearance	No defects or abnormalities.		Apply the rated voltage for 500 hours $^{+24}_{0}$ hours at 40±2˚C and in 90 to 95% humidity. Remove and set for 24 hours ±2 hours (temperature compensating type) and 48 hours ±4 hours (high dielectric constant type) at room temperature, then measure. The charge/discharge current is less than 50mA.
		Capacitance Change	Within ±5% or ±0.5pF (Whichever is larger)	X7R : Within ±12.5% Z5U, Y5V : Within ±30%	
		Q/D.F.	30pF min. : Q ≧ 350 10pF to 30pF : Q ≧ 275+ $\frac{5}{2}$ C 10pF max. : Q ≧ 200+10C C : Nominal capacitance (pF)	X7R : 0.05 max. Z5U, Y5V : 0.075 max.	
		Insulation Resistance	10000MΩ or 500Ω • F min. (Whichever is smaller)	X7R : 10000MΩ or 500Ω • F min. (whichever is smaller) Z5U, Y5V : 1000MΩ or 50Ω • F min. (whichever is smaller)	
17	High Temperature Load	Appearance	No defects or abnormalities.		Apply 200% of the rated voltage for 1000 hours $^{+48}_{0}$ hours at the maximum operating temperature. Remove and set for 24 hours ±2 hours (temperature compensating type) and 48 hours ±4 hours (high dielectric comstant type) at room temperature, then measure. The charge/discharge current is less than 50mA. • Initial measurement for high dielectric constant type A voltage treatment shall be given to the capacitor in which a DC voltage of 200% of the rated voltage is applied for one hour at the maximum operating temperature ±3 ˚C. Then set for 48 hours ±4 hours at room temperature and conduct initial measurement.
		Capacitance Change	Within ±3% or ±0.3pF (Whichever is larger)	X7R : Within ±12.5% Z5U, Y5V : Within ±30%	
		Q/D.F.	30pF min. : Q ≧ 350 10pF to 30pF : Q ≧ 275+ $\frac{5}{2}$ C 10pF max. : Q ≧ 200+10C C : Nominal capacitance (pF)	X7R : 0.04 max. Z5U, Y5V : 0.075 max.	
		Insulation Resistance	10000MΩ or 500Ω • F min. (Whichever is smaller)	X7R : 10000MΩ or 500Ω • F min. (whichever is smaller) Z5U, Y5V : 1000MΩ or 50Ω • F min. (whichever is smaller)	
18	Solvent Resistance	Appearance	No defects or abnormalities.		The capacitor shall be fully immersed, unagitated, in reagent at 20 to 25 ˚C for 30 sec. ±5 sec. and then remove gently. Marking on the surface of the capacitor shall immendiately be visually examined. Reagent : • Isopropyl alcohol
		Marking	Legible		

Table A

Char.	Nominal Values (ppm/˚C) *1	Capacitance Change from 25˚C (%) −55˚C Max.	−55˚C Min.	−30˚C Max.	−30˚C Min.	−10˚C Max.	−10˚C Min.
C0G	0± 30	0.58	−0.24	0.40	−0.17	0.25	−0.11
R2H	−220± 60	3.02	1.28	2.08	0.88	1.32	0.56
U2J	−750±120	8.78	5.04	6.04	3.47	3.84	2.21

*1 : Nominal values denote the temperature coefficient within a range of 25 to 125˚C (for C0G)/85˚C (for other TC).

Table B

Char.	Temp. Range	Reference Temp.	Cap. Change Rate
X7R	−55 to +125˚C	25˚C	Within ± 15%
Z5U	+10 to + 85˚C		Within $^{+22}_{-56}$%
Y5V	−30 to + 85˚C		Within $^{+22}_{-82}$%

Specifications and Test Methods

■ Capacitance-Temperature Chatacteristics

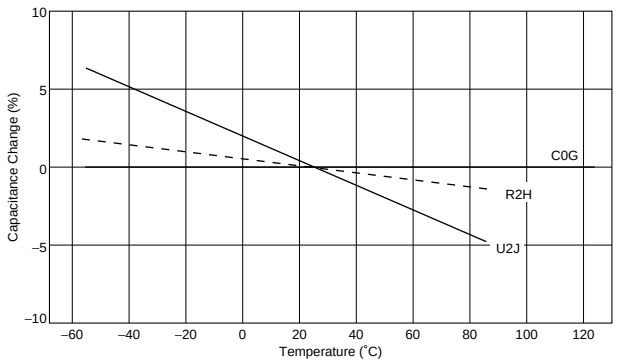

■ Capacitance-DC Voltage Chatacteristics

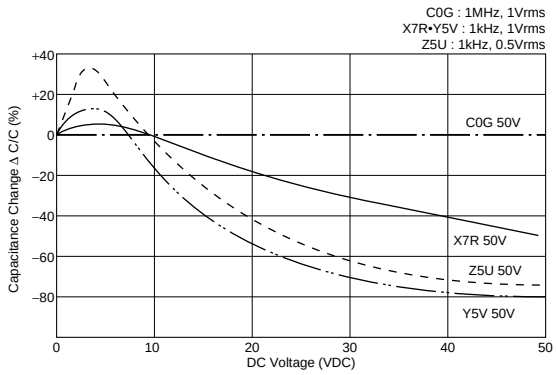

■ Capacitance Change-Aging

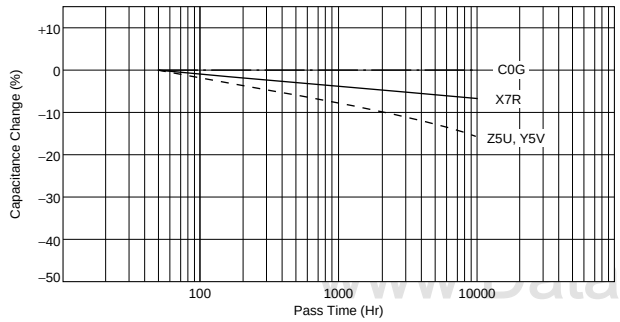

■ Capacitance-AC Voltage Chatacteristics

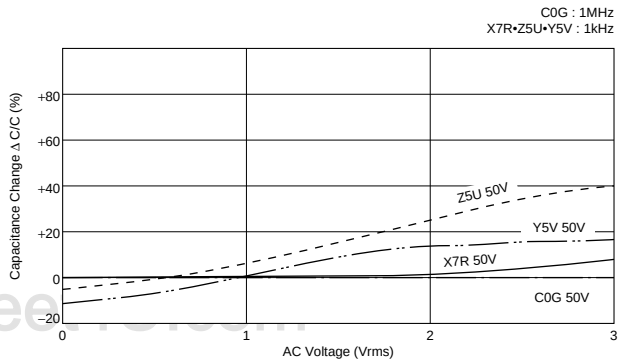

■ Capacitance-Resonant Frequency

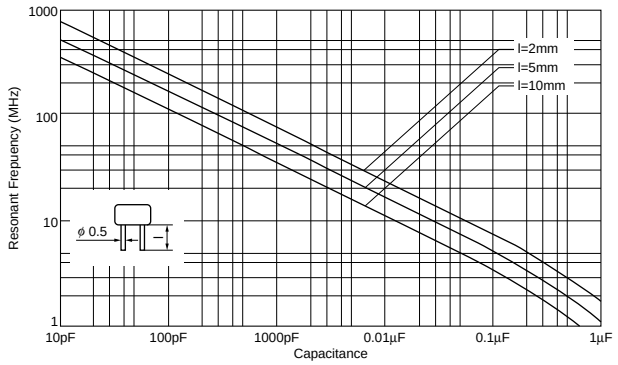

■ Impedance-Frequency Characteristics

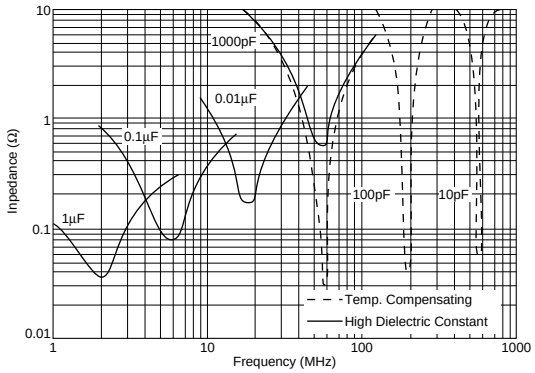

■ PACKAGING

Two types of packaging for epoxy coated monolithic ceramic capacitors are available.

1. BULK PAGING

Minimum quantity *

Size code	Dimensions (LxW)	Minimum quantity (pcs./bag)
1	3.5x3.0	500
2	5.0x3.5	
3	5.0x4.5	
4	7.5x5.0	
5	7.5x7.5	
6	10.0x10.0	
7	12.5x12.5	100

Please order with an integral multiple of the minimum quantity above.

2. TAPE CARRIER PACKAGING

(1) Dimensions of Ammo Pack

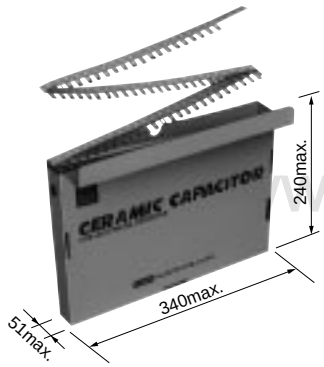

(in mm)

(2) Minimum quantity *

Size and Leed code	Dimensions (LxW)	Minimum quantity (pcs./Ammo Pack)
2S□	5.0x3.5	2000
2M□		
3S□	5.0x4.5	
3M□		
4M□	7.5x5.0	
5E□	7.5x7.5	
6E□	10.0x10.0	1500

Please order with an integral multiple of the minimum quantity above.

(3) Marking on Ammo Pack

The following items are in the marking position on the side of the ammo pack.

(1) Part Number
(2) Quantity
(3) Inspection No.
(4) Manufacturer's name, or its abbreviation.
(5) Other requirements.

(4) Incidental condition of taping

(4)-1 Tape splicing

• If carrier tape has been cut :

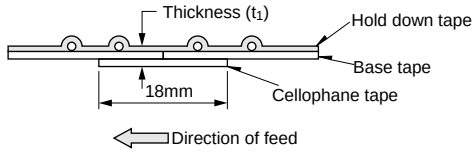

Match the separated base tapes, and connect the back side with cellophane tape.
Ensure that thickness (t_1) does not exceed 1.05mm.

• If hold down tape has been cut :

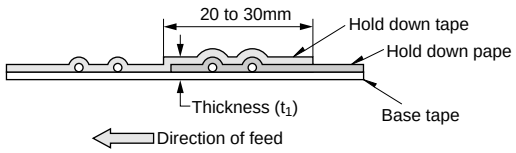

Overlap the hold down tape. Ensure that thickness (t_1) does not exceed 1.05mm.

• If both hold down tape and base tape have been cut :

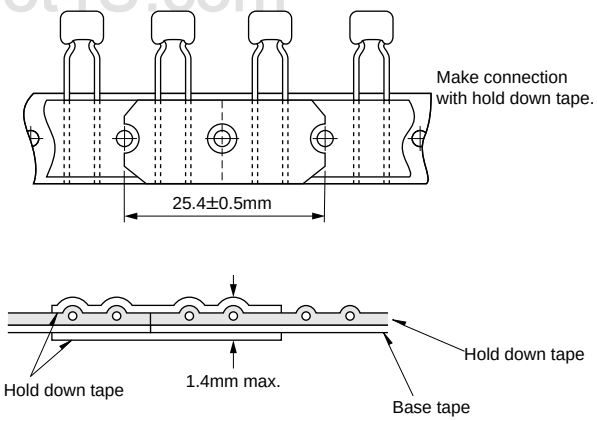

* "Minimum Quantity" means the numbers of units of each delivery or order. The quantity should be an integral multiple of the "minimum quantity". (Please note that the actual delivery quantity in a package may change sometimes.)

Continued on the following page.

Packaging

Continued from the preceding page.

(5) Taping dimensions

Inside Crimp Type Taping

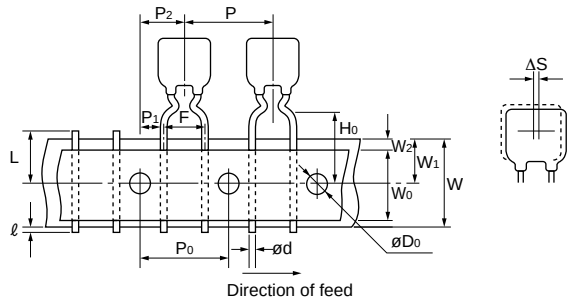

Size and Leed code	Dimensions (LxW)
2M1	5.0x3.5
2M2	
3M1	5.0x4.5
3M2	
4M1	7.5x5.0
4M2	

Straight Type Taping

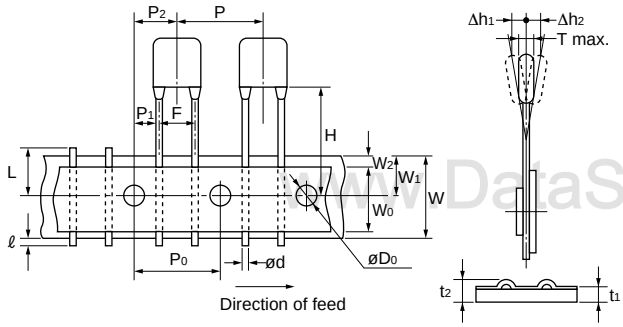

Size and Leed code	Dimensions (LxW)
5E1	7.5x7.5
5E2	
6E1	10.0x10.0
6E2	

Outside Crimp Type Taping

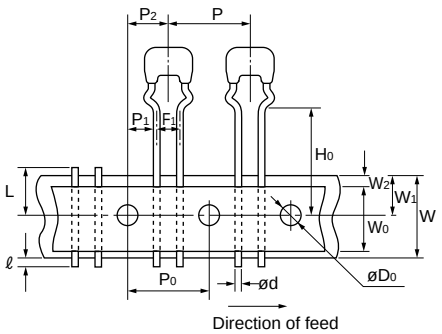

Size and Leed code	Dimensions (LxW)
2S1	5.0x3.5
2S2	
3S1	5.0x4.5
3S2	

Item	Code	Dimensions (mm)
Pitch of Component	P	12.7
Pitch of Sprocket Hole	P_0	12.7±0.2
Lead Spacing	F_1	$2.5^{+0.4}_{-0.2}$
	F	$5.0^{+0.6}_{-0.2}$
Length from Hole Center to Component Center	P_2	6.35±1.3
Length from Hole Center to Lead	P_1	3.85±0.7
	P_1	5.1±0.7 (S1) (S2)
	254±1.5 Total length of components pitch X 20	
Body Dimension	See Dimensions	
Deviation Along Tape, Left or Right Defect	ΔS	±2.0
Carrier Tape Width	W	18.0±0.5
Position of Sprocket Hole	W_1	$9.0^{+0}_{-0.5}$
Lead Distance between Reference and Bottom Plane	H_0	16.0±0.5 (M1) (S1)
	H_0	20.0±0.5 (M2) (S2)
For Straight Lead Type	H	20±0.5 (E2), 17.5±0.5 (E1)
Diameter of Sprocket Hole	D_0	4.0±0.1
Lead Diameter	d	0.5±0.05
Total Tape Thickness	t_1	0.6±0.3
Total Thickness of Tape and Lead Wire	t_2	1.5 max.
Body Thickness	T	See Dimensions
Deviation Across Tape	Δh1	1.0 max.
	Δh2	1.0 max.
Portion to Cut in Case of Defect	L	$11.0^{+0}_{-1.0}$
Protrusion Length	ℓ	0.5 max.
Hold Down Tape Width	W_0	11.5 min.
Hold Down Tape Position	W_2	1.5±1.5
Coating Extension	See Dimensions	

(in mm)

Notice

■ Notice (Soldering and Mounting)

1. Allowable Conditions for Soldering Temperature and Time

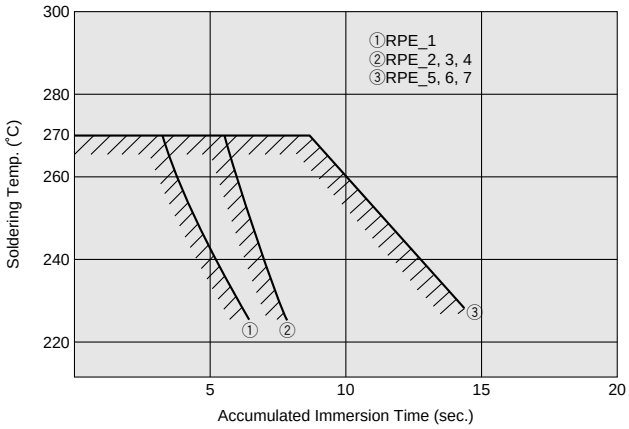

Perform soldering within tolerance range (shaded portion).

2. Insertion of the Lead Wire

(1) When soldering, insert the lead wire into the PCB without mechanically stressing the lead wire.

(2) Insert the lead wire into the PCB with a distance appropriate to the lead space.

⚠Note:

1. Export Control
   〈For customers outside Japan〉
   Murata products should not be used or sold for use in the development, production, stockpiling or utilization of any conventional weapons or mass-destructive weapons (nuclear weapons, chemical or biological weapons, or missiles), or any other weapons.
   〈For customers in Japan〉
   For products which are controlled items subject to the "Foreign Exchange and Foreign Trade Law" of Japan, the export license specified by the law is required for export.
2. Please contact our sales representatives or product engineers before using our products listed in this catalog for the applications listed below which require especially high reliability for the prevention of defects which might directly cause damage to the third party's life, body or property, or when intending to use one of our products for other applications than specified in this catalog.
   ① Aircraft equipment ② Aerospace equipment
   ③ Undersea equipment ④ Power plant equipment
   ⑤ Medical equipment ⑥ Transportation equipment (vehicles, trains, ships, etc.)
   ⑦ Traffic signal equipment ⑧ Disaster prevention / crime prevention equipment
   ⑨ Data-processing equipment ⑩ Application of similar complexity and/or reliability requirements to the applications listed in the above
3. Product specifications in this catalog are as of July 2002. They are subject to change or our products in it may be discontinued without advance notice. Please check with our sales representatives or product engineers before ordering. If there are any questions, please contact our sales representatives or product engineers.
4. Please read rating and ⚠CAUTION (for storage and operating, rating, soldering and mounting, handling) in this catalog to prevent smoking and/or burning, etc.
5. This catalog has only typical specifications because there is no space for detailed specifications. Therefore, please approve our product specification or transact the approval sheet for product specification before ordering.
6. Please read CAUTION and Notice in this catalog for safety. This catalog has only typical specifications. Therefore you are requested to approve our product specification or to transact the approval sheet for product specification, before ordering.
7. Please note that unless otherwise specified, we shall assume no responsibility whatsoever for any conflict or dispute that may occur in connection with the effect of our and/or third party's intellectual property rights and other related rights in consideration of your using our products and/or information described or contained in our catalogs. In this connection, no representation shall be made to the effect that any third parties are authorized to use the rights mentioned above under licenses without our consent.
8. No ozone depleting substances (ODS) under the Montreal Protocol are used in our manufacturing process.

muRata **Murata Manufacturing Co., Ltd.**

http://www.murata.com/

Head Office
2-26-10, Tenjin Nagaokakyo-shi, Kyoto 617-8555, Japan Phone: 81-75-951-9111

International Division
3-29-12, Shibuya, Shibuya-ku, Tokyo 150-0002, Japan
Phone: 81-3-5469-6123 Fax: 81-3-5469-6155 E-mail: intl@murata.co.jp